AUTHORIZED
VEHICLES
ONLY

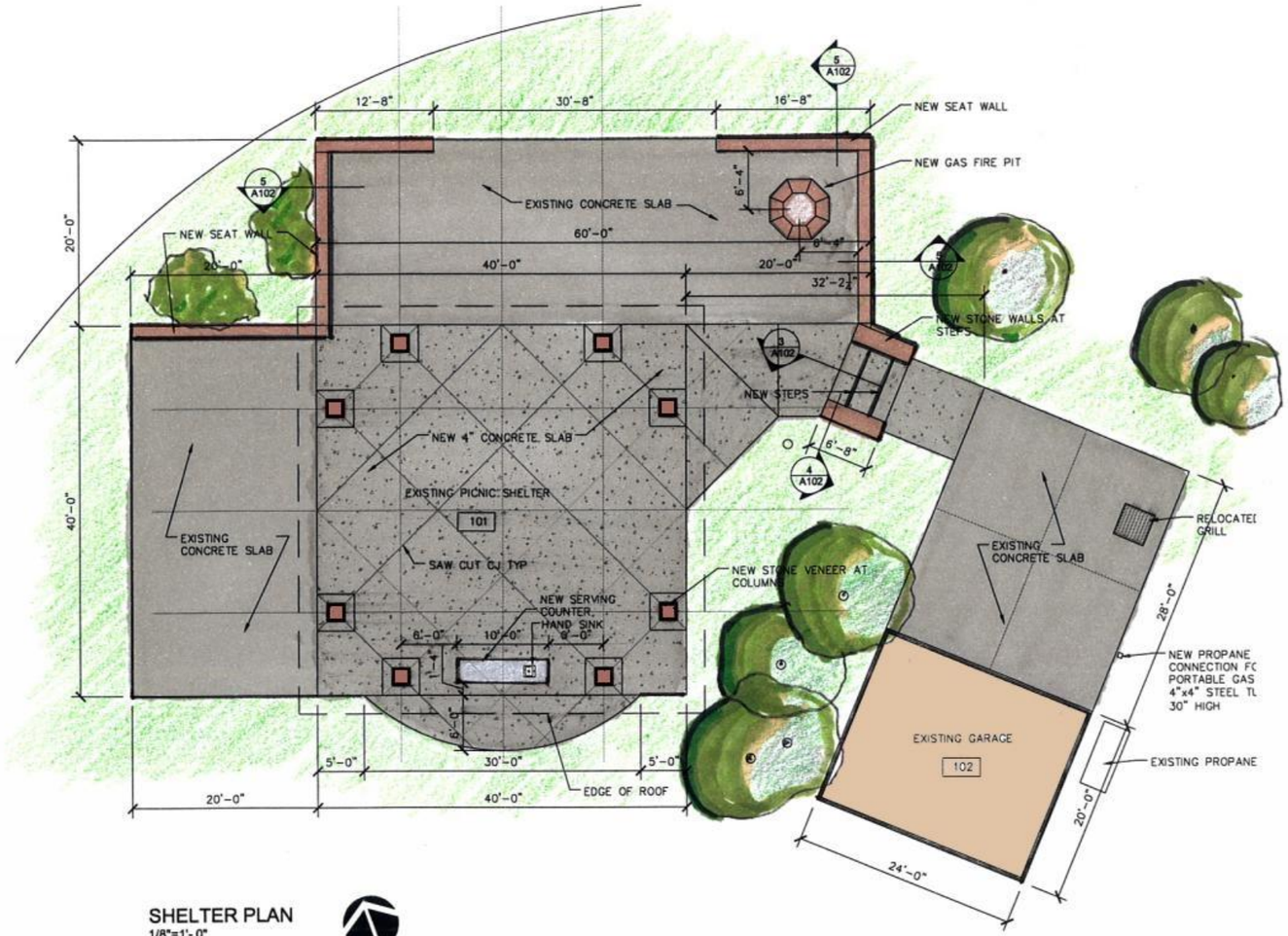

SHELTER PLAN
1/8"=1'-0"

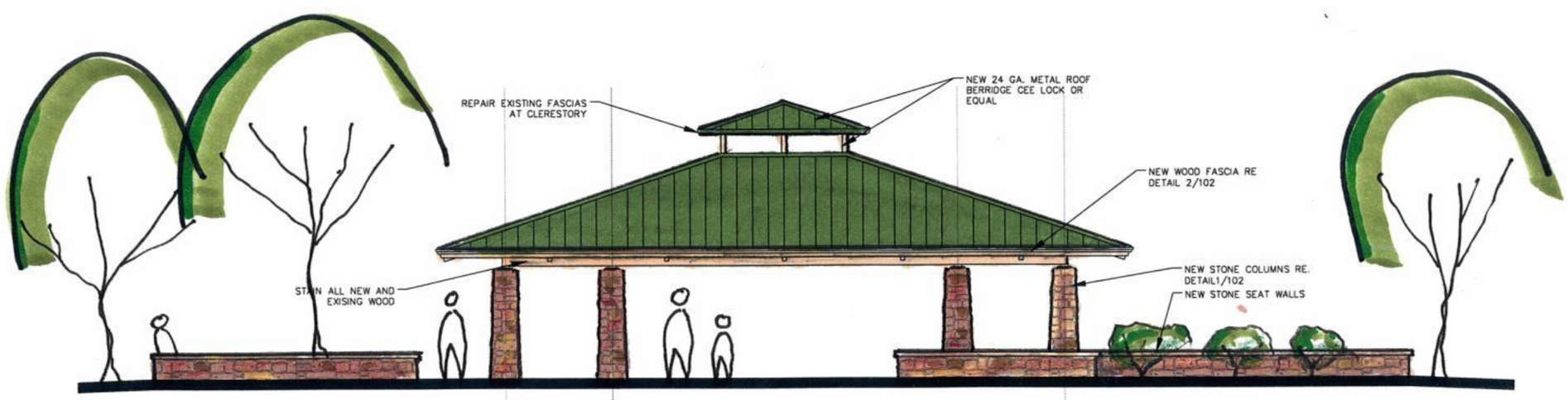

NORTH ELEVATION
1/4"=1'-0"

The ARCHITECTS' STUDIO, Inc
405 Mason Court, Suite 115A
Fort Collins, Colorado
80524
TEL: (970) 482-8125

HERMIT PARK

GROUP PICNIC SHELTER RENOVATION

US HWY 36
LARIMER COUNTY, CO

LARIMER COUNTY
COMMITTED TO EXCELLENCE

SEAL:

THESE DRAWINGS ARE PRELIMINARY

NOT FOR CONSTRUCTION

ISSUE DATE: 03 AUG 2013
PROJECT NO: 10-345.3

REVISIONS:

DRAWING TITLE:
SHELTER PLAN

SHEET:

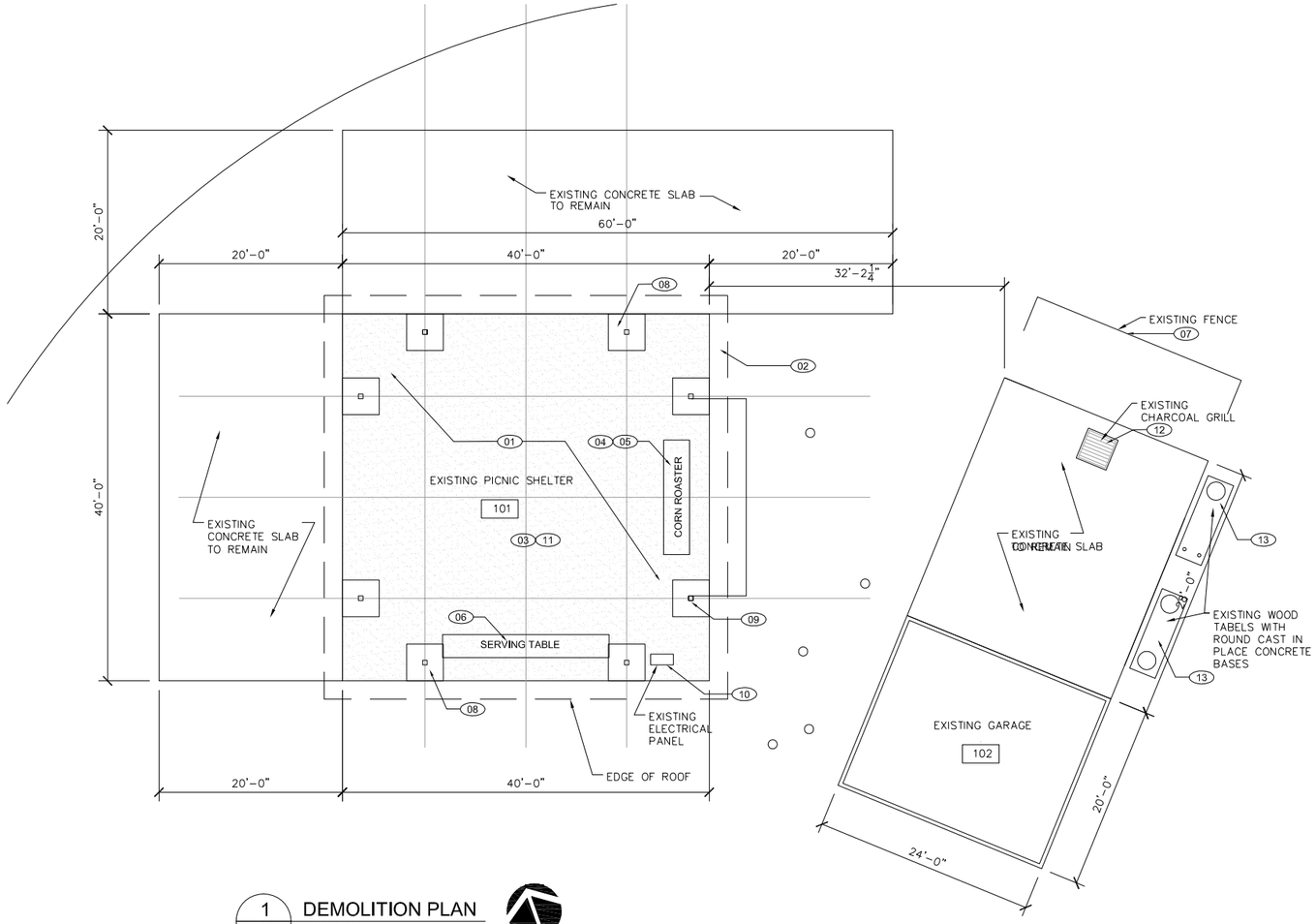

1 / A100 DEMOLITION PLAN
1/8"=1'-0"

NORTH

GENERAL NOTES

A THE GENERAL CONCEPT IS A GENERAL REHAB OF THE SHELTER.

B CONTRACTORS SHOULD VISIT THE PROJECT. THE CONTRACTOR WILL BE RESPONSIBLE TO REMOVE AND DISPOSE OF ALL DEMO ITEMS

DEMOLITION NOTES

01 REMOVE EXISTING CONCRETE SLAB THAT IS UNDER THE SHELTER ROOF. OTHER SLABS ARE TO REMAIN

02 REMOVE EXISTING SHINGLE ROOFING

03 REMOVE EXISTING ELECTRICAL CONDUITS AND LIGHT FIXTURES MOUNTED TO THE STRUCTURE

04 REMOVE EXISTING CORN ROASTER AND ASSOCIATED GAS PIPING

05 REMOVE EXISTING STEEL TRACK AND ELECTRICAL TRACK MOUNTED ABOVE THE CORN ROASTER

06 REMOVE EXISTING SERVING TABLE

07 REMOVE EXISTING WOOD FENCING

08 CUT DOWN THE TOP OF THE FOOTING AT EACH COLMN. REFER TO DETAIL.

09 REMOVE MISCELLANEOUS BRACKETS WELDED TO THE COLUMNS

10 REMOVE EXISTING ELECTRICAL PANELS

11 REMOVE EXISTING SPEAKERS AND ASSOCIATED WIRING MOUNTED UP IN THE CUPOLA

12 REMOVE EXISTING CHARCOAL GRILL. CLEAN AND PREPARE FOR NEW LOCATION

13 REMOVE EXISTING TABLES AND BASES

INDICATES CONCRETE SLABS TO BE RMOVED

The ARCHITECTS' STUDIO

The ARCHITECTS' STUDIO, Inc.
405 Mason Court, Suite 115A
Fort Collins, Colorado
80524

TEL: (970) 482-8125

HERMIT PARK

GROUP PICNIC SHELTER RENOVATION

US HWY 36
LARIMER COUNTY, CO

LARIMER COUNTY
COMMITTED TO EXCELLENCE

SEAL:

THESE DRAWINGS ARE PRELIMINARY

NOT FOR CONSTRUCTION

PRELIMINARY
8-05-2013
NOT FOR CONSTRUCTION

ISSUE DATE: 05 AUG 2013
PROJECT NO: 10-345.3

REVISIONS:

DRAWING TITLE:
DEMOLITION PLAN

SHEET:
A-100

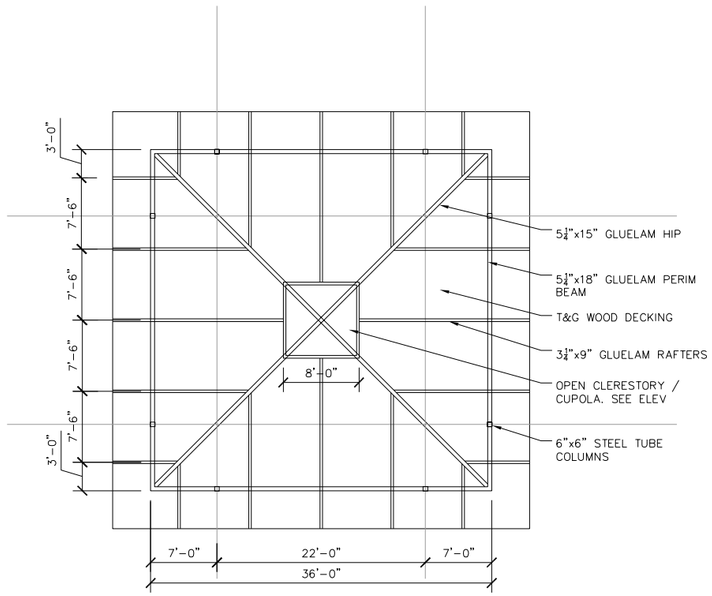

2 A101 REFLECTED CEILING PLAN
1/8"=1'-0"

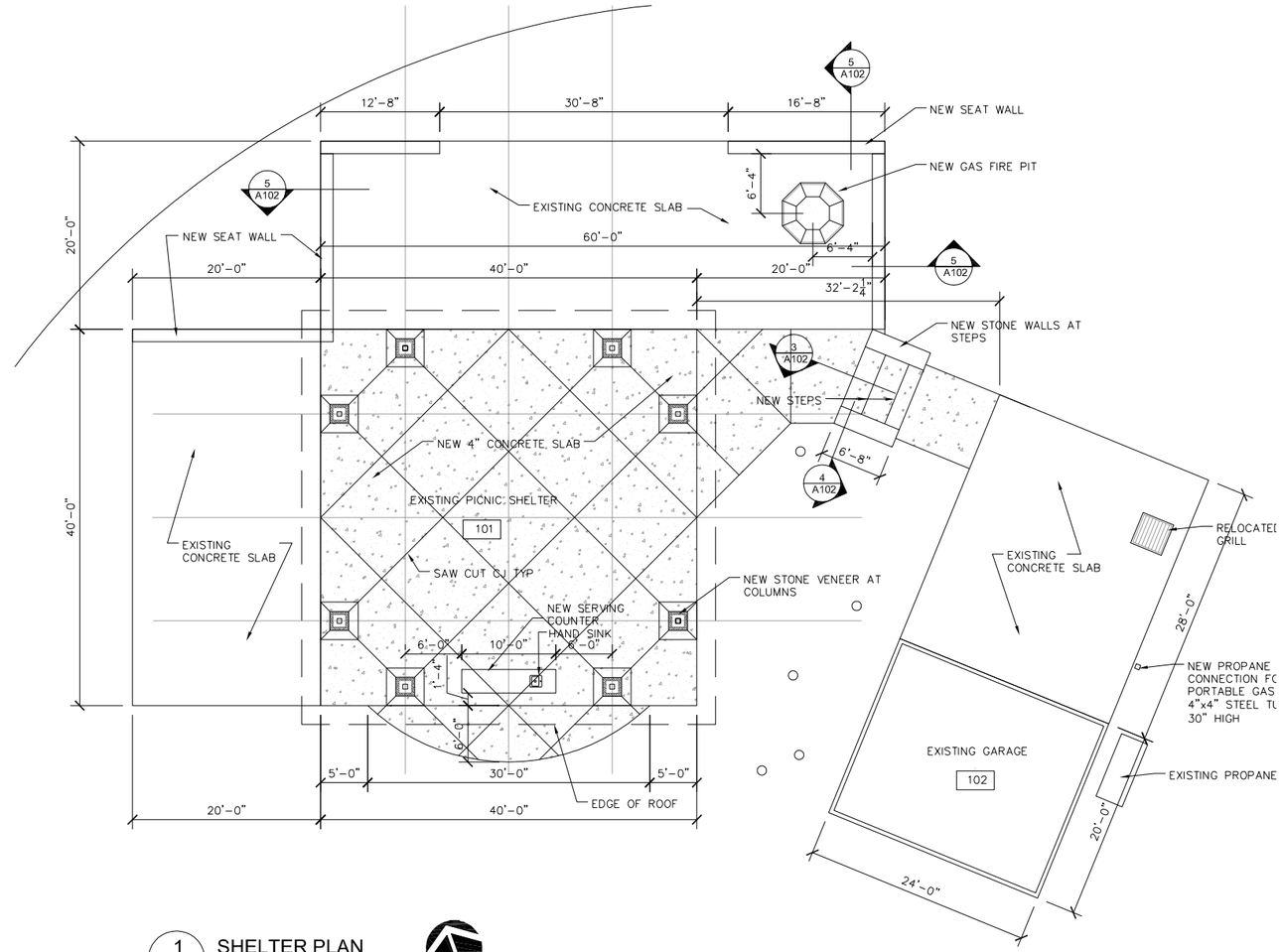

1 A101 SHELTER PLAN
1/8"=1'-0"

NORTH

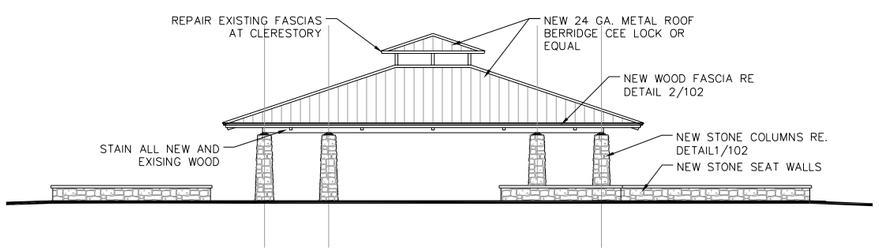

4 A101 NORTH ELEVATION
1/8"=1'-0"

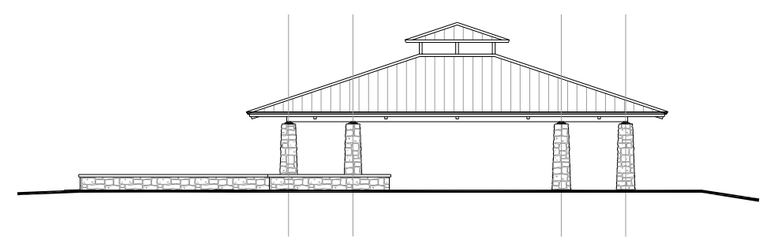

3 A101 WEST ELEVATION
1/8"=1'-0"

The ARCHITECTS' STUDIO
The ARCHITECTS' STUDIO, Inc.
405 Mason Court, Suite 115A
Fort Collins, Colorado
80524
TEL: (970) 482-8125

HERMIT PARK

GROUP PICNIC SHELTER RENOVATION

US HWY 36
LARIMER COUNTY, CO

LARIMER COUNTY
COMMITTED TO EXCELLENCE

SEAL:
THESE DRAWINGS ARE PRELIMINARY

NOT FOR CONSTRUCTION

PRELIMINARY
8-05-2013
NOT FOR CONSTRUCTION

ISSUE DATE: 05 AUG 2013
PROJECT NO: 10-345.3

REVISIONS:

DRAWING TITLE:
SHELTER PLAN

SHEET:
A-102

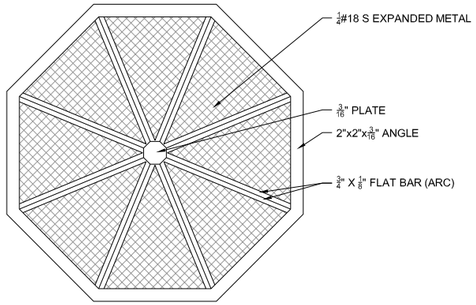

6 / A102 FIRE PIT COVER DETAIL
1"=1'-0"

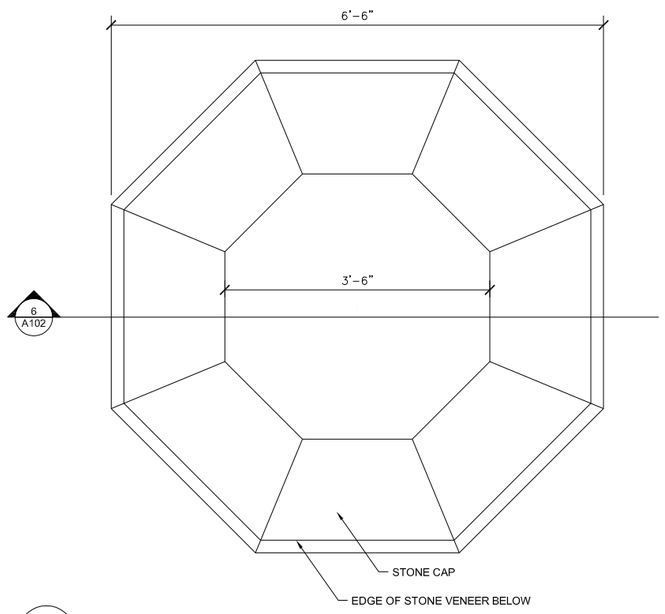

6 / A102 FIRE PIT DETAIL
1"=1'-0"

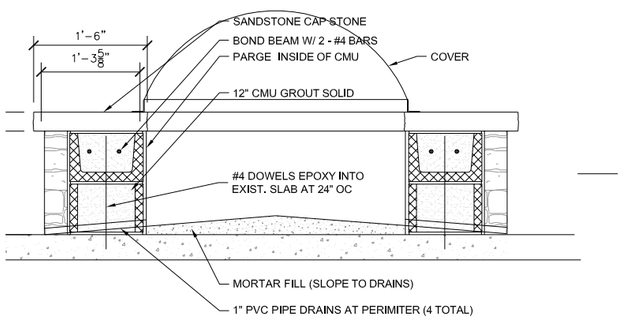

6 / A102 FIRE PIT DETAIL
1"=1'-0"

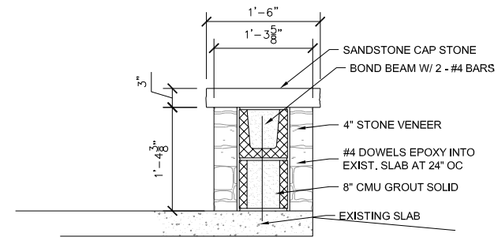

5 / A102 SEAT WALL DETAIL
1"=1'-0"

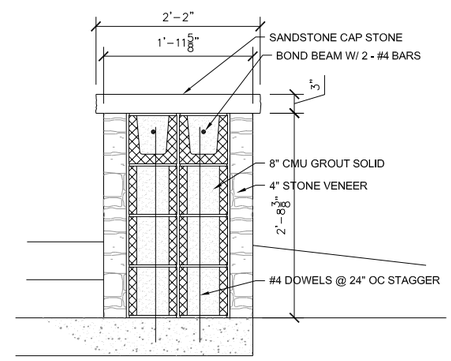

4 / A102 STEP WALL DETAIL
1"=1'-0"

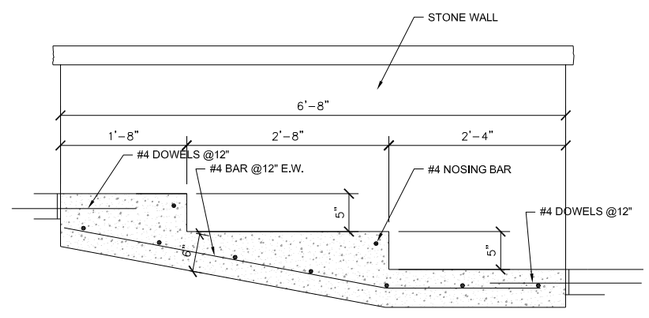

3 / A102 STEP DETAIL
1"=1'-0"

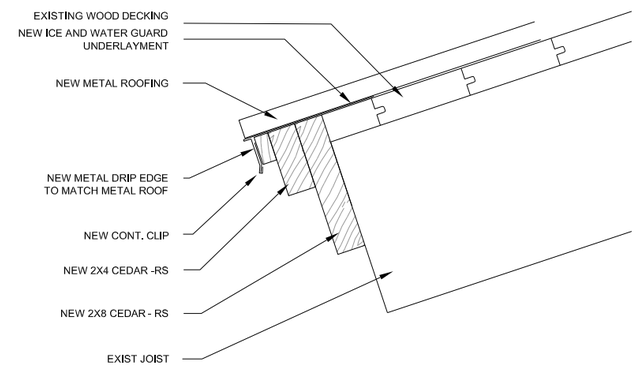

2 / A102 FASCIA DETAIL
3"=1'-0"

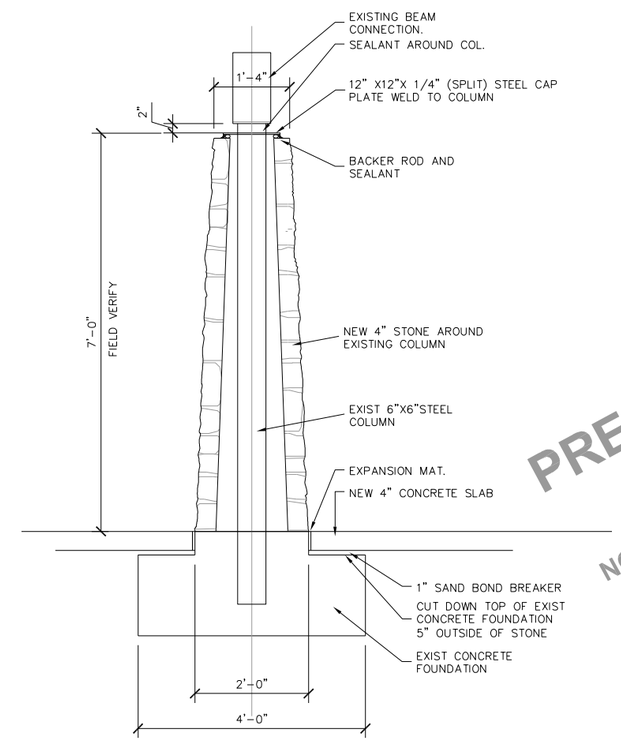

1 / A102 NEW STONE COLUMN DETAIL
3/4"=1'-0"

The ARCHITECTS' STUDIO, Inc.
405 Mason Court, Suite 115A
Fort Collins, Colorado
80524

TEL: (970) 482-8125

HERMIT PARK

GROUP PICNIC SHELTER RENOVATION

US HWY 36
LARIMER COUNTY, CO

LARIMER COUNTY
COMMITTED TO EXCELLENCE

SEAL:

THESE DRAWINGS ARE PRELIMINARY

NOT FOR CONSTRUCTION

PRELIMINARY
8-05-2013
NOT FOR CONSTRUCTION

ISSUE DATE: 05 AUG 2013
PROJECT NO: 10-345.3

REVISIONS:

DRAWING TITLE:
DETAILS

SHEET:
A-102

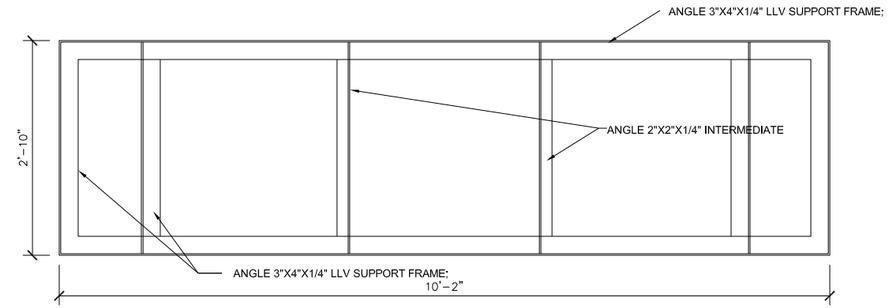

3 A103 SERVING COUNTER TOP FRAME
1"=1'-0"

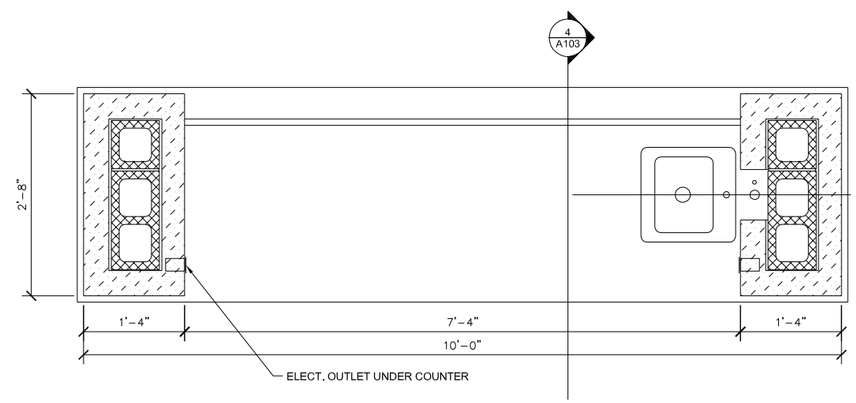

2 A103 SERVING COUNTER ELEVATION
1"=1'-0"

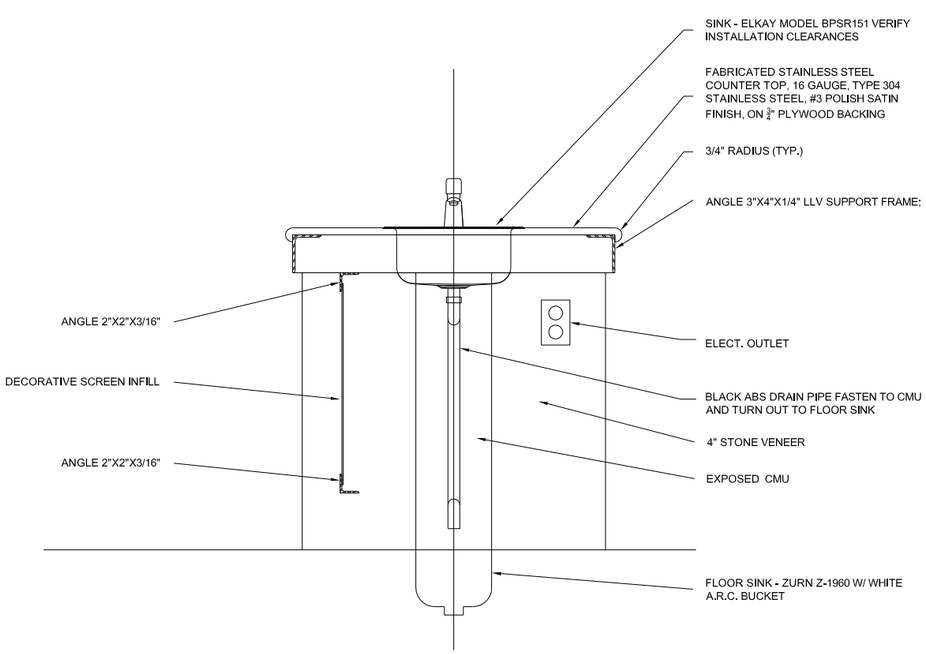

4 A103 SERVING COUNTER SECTION
1 1/2"=1'-0"

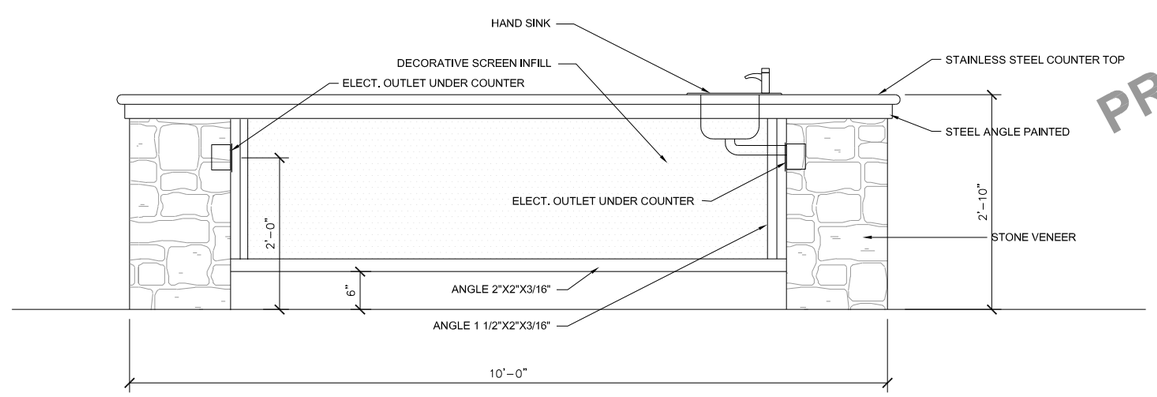

1 A103 SERVING COUNTER ELEVATION
1"=1'-0"

The ARCHITECTS' STUDIO, Inc.
405 Mason Court, Suite 115A
Fort Collins, Colorado
80524
TEL: (970) 482-8125

HERMIT PARK

GROUP PICNIC SHELTER RENOVATION

US HWY 36
LARIMER COUNTY, CO

LARIMER COUNTY
COMMITTED TO EXCELLENCE

SEAL:

THESE DRAWINGS ARE PRELIMINARY

NOT FOR CONSTRUCTION

PRELIMINARY
8-05-2013
NOT FOR CONSTRUCTION

ISSUE DATE: 05 AUG 2013
PROJECT NO: 10-345.3
REVISIONS:

DRAWING TITLE:
DETAILS

SHEET:
A-103